Lecture #29

****
Review -- 1 min
****
Storage systems

1. Disks – bw, capacity improving more quickly than seek
2. disk performance models
3. RAID – reliability, performance
4. tertiary – much more capacity, much worse seek

****
Outline - 1 min
****
Networks:

- background, motivation
- performance metrics
  - bandwidth, latency, overhead
- hardware issues
  - media
  - network interface
  - switches
  - network topology
- connections v. connectionless
  - congestion control

****
Preview - 1 min
****
<see above>

****
Lecture - 20 min
****
Networks: Background, Motivation

Impact of networks on architecture is manifest

80's LANs → workstations, PCs; move away from mainframes

90's WWW → ?computing → communication?;

?more mainframes (huge data/information centers)

(unexpected, at least to me, but internet means that millions of people can access a popular server, so distribution has actually increased the need for big servers

90's "killer network" – cheap switches → interconnect hundreds of PCs in a building

- Goal: Communication between computers
- Eventual goal: treat collection of computers as if one big computer; distributed resource sharing
- Theme: different computers must agree on many things
  - overriding importance of standards and protocols

Many networks: Ethernet, modem, wireless, ATM, FDDI, X.25, T1, T3, …
All basically the same:

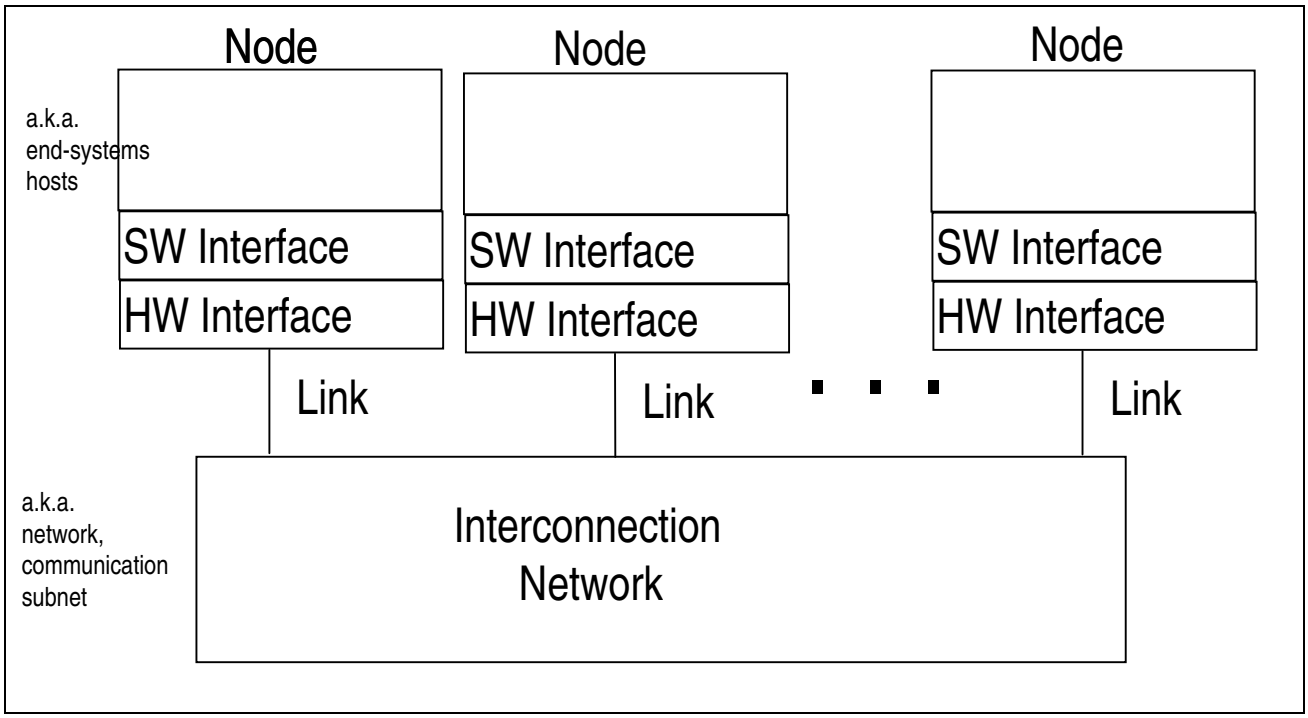

Facets of networks people talk about a lot

- Direct (point-to-point) v. indirect (multi-hop)
- topology (bus, ring, hypercube)
- routing algorithms
- switching
- wiring (copper, coax, fiber)

What really matters

- latency
- bandwidth
- cost
- reliability

3 communities

- MPP – performance, latency, bandwidth
- LAN – workstations, cost
- WAN – telecommunications, reliability, phone call revenue

→ we'll try to pull together into single terminology

ABC's of Networks
(Motivate complexity incrementally)

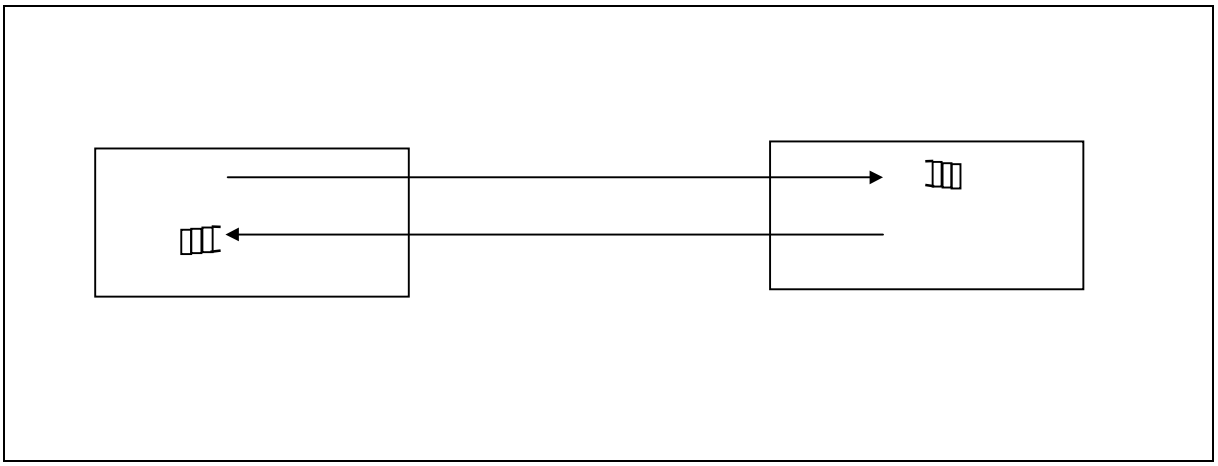

Starting point – send bits between 2 computers

- queue(FIFO) on each end
- can send both ways “Full duplex”
- Rules for communication: protocol
    - simple protocol – once computer can read data from the other
    - Request(address); Response(data)
    - → need request, response signaling

Messages: headers, trailers

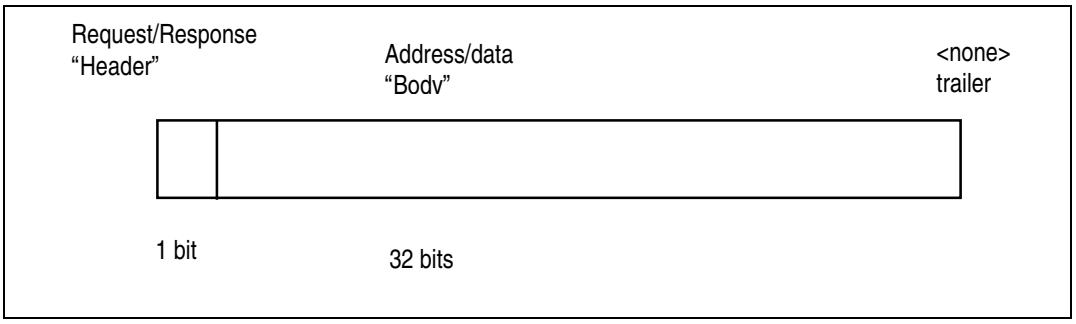

header/trailer - information to deliver a message
header:

0: please send data from address
1: packet contains data corresponding to request

body/payload: data in message

Physical Reality: Packets **Abstraction: messages**

limited size	arbitrary size
unordered	ordered
unreliable	reliable
machine-to-machine	process-to-process
only on LAN	routed anywhere
asynchronous	synchronous
not secure	secure

QUESTION: how do you build these abstractions?

What if more than 2 computers want to communicate?
→ address field
What if packet garbled?
→ add error detection (e.g. CRC)
What if packet lost?
→ more elaborate protocols to detect loss
e.g. NAK, timeouts
What if multiple processes/machine
per-process queue

These questions lead to more complex protocols

Manage complexity via layering
e.g. TCP/ip
IP: get data from one machine to another
(addressing, routing)
TCP: unlimited size, multiple processes, in-order, reliable, congestion control

****
Admin - 3 min
****

Sermon: simplicity
project checkpoints today

****
Lecture - 24 min
****

Latency
Overhead
Bandwidth

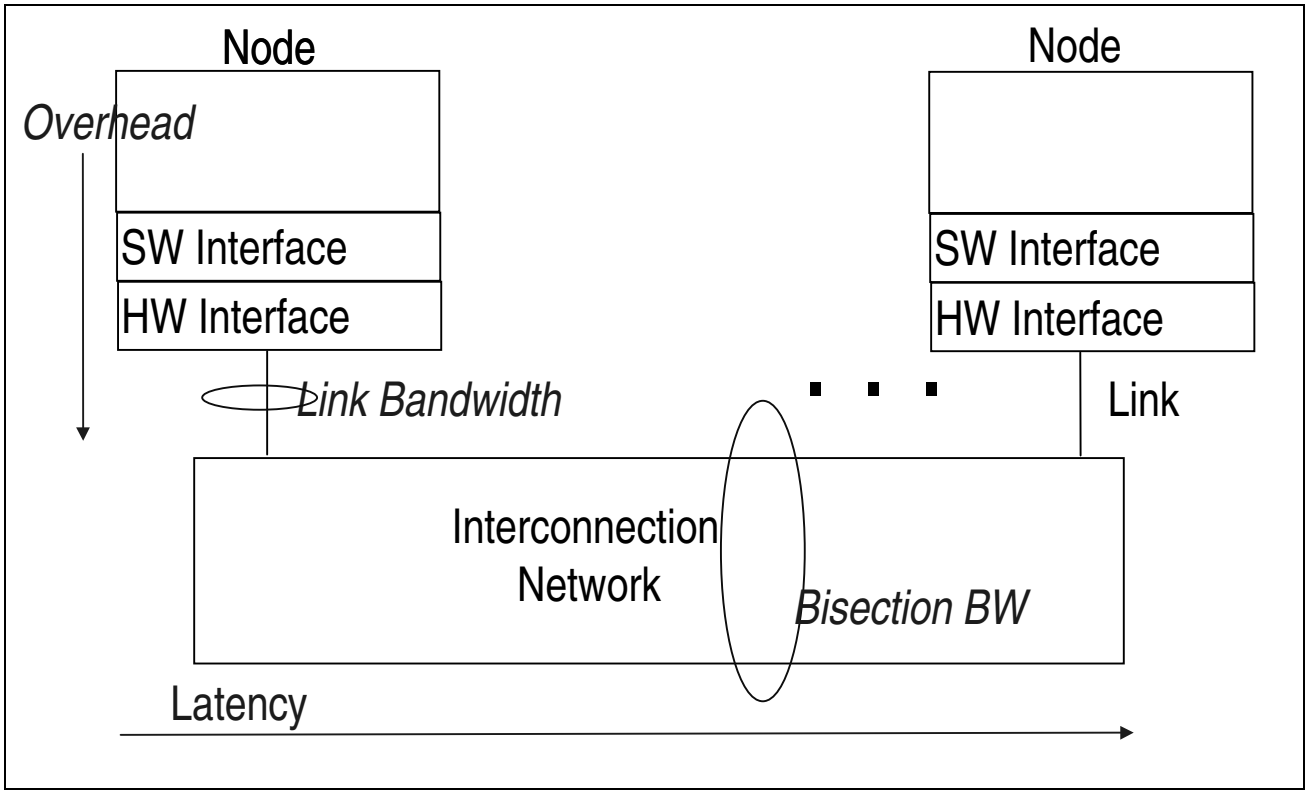

Overhead v. Latency
overhead – time used to insert a message (CPU busy)
latency – time spent waiting for a message

difference is analogous to pipelining in CPU
    overhead ~ pipeline stage
    latency ~ pipeline depth
(a little different because BANDWIDTH also limits rate of inserting

new packets into pipeline; pipelining analogy holds for small, fixed-size packets)

→ you can hide latency, but you always pay for overhead

Link bandwidth v. bisection bandwidth

link bandwidth – how fast can one machine insert bits onto the wire

bisection bandwidth – accounts for interference among different streams of communication

bisection bandwidth definition – min cut of network

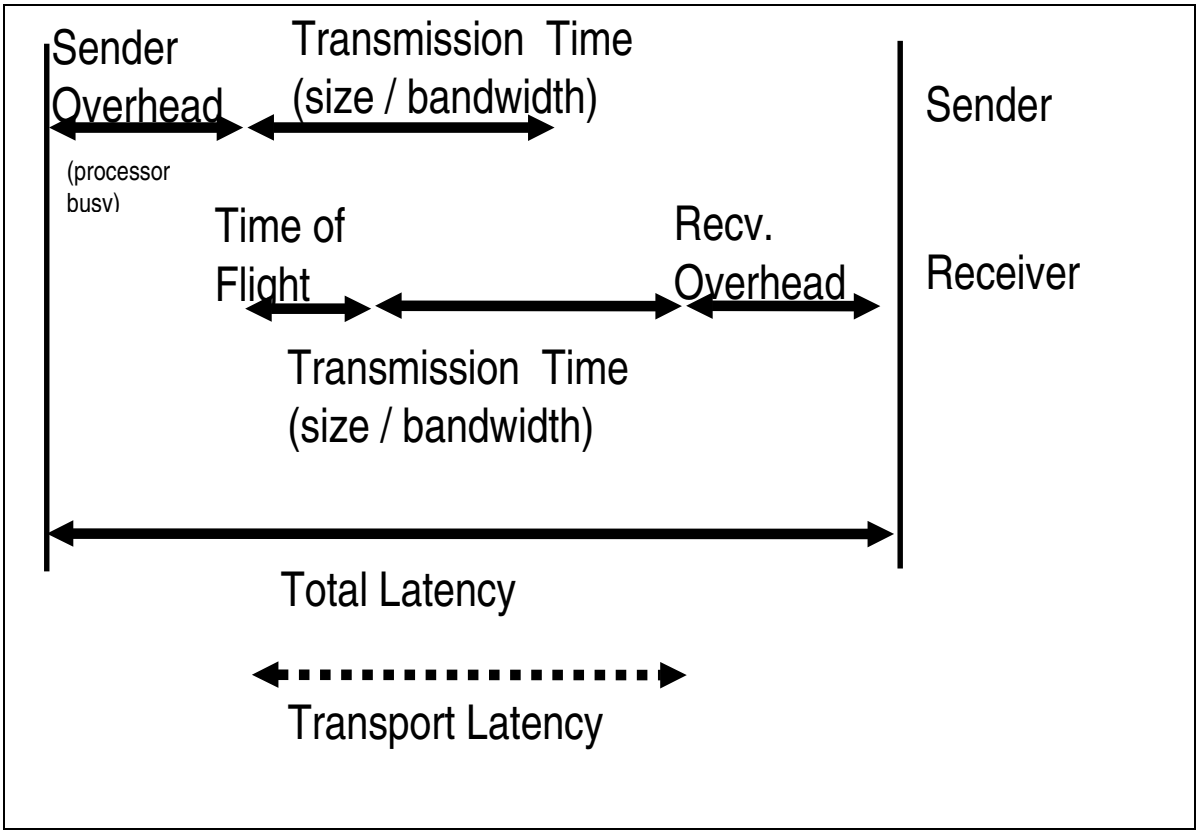

Performance Metrics: another view

Example performance measures

	MPP (CM-5)	LAN (Ethernet)

Bisection BW	N * 5 MB/s	1.125 MB/s
Link BW	20 MB/s	1.125 MB/s
Latency	5 us	15 us
HW Overhead send/recv	.5us/.5us	6us/6us
SW overhead send/recv	1.6us/12.4us	200us/241us

Example of importance of overhead
---
100 MB/s network with 100us overhead v. 10MB/s network with 10us overhead:

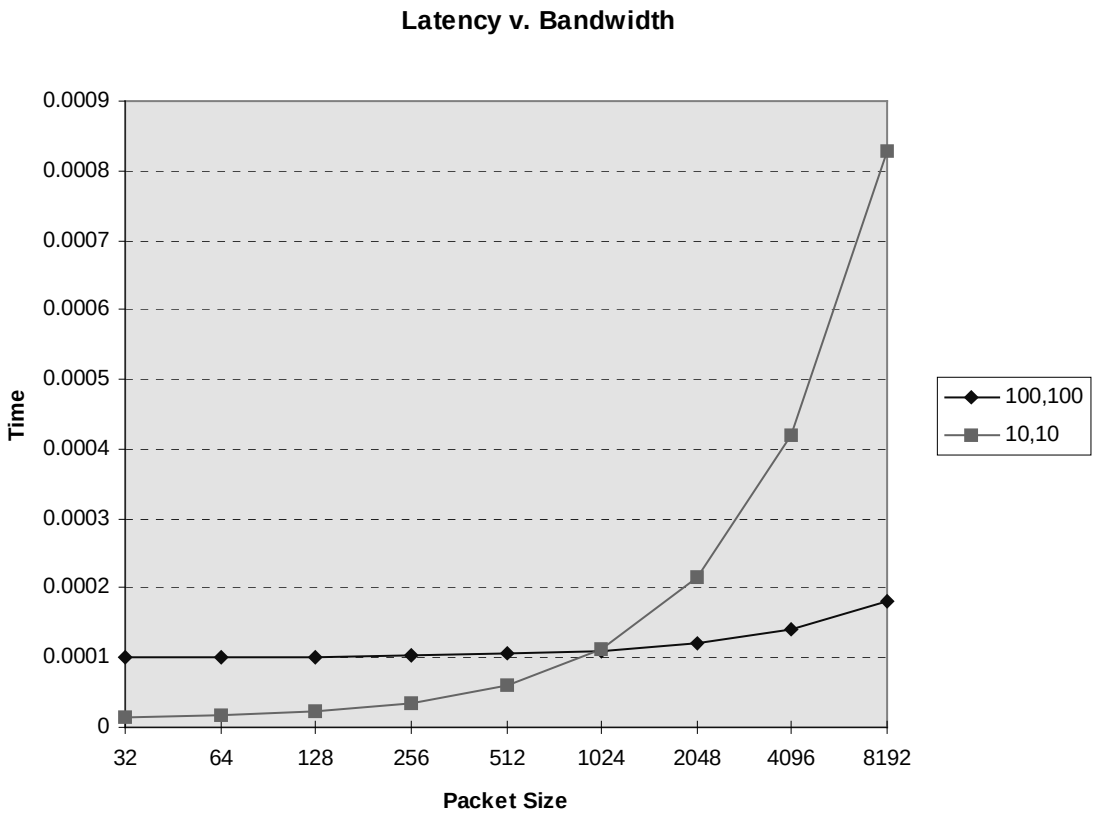

Example – intel paragon had a high bandwidth network (40 MB/s?),
but software overhead was > 100us → needed to send huge amounts of data to get within 10% of peak overhead

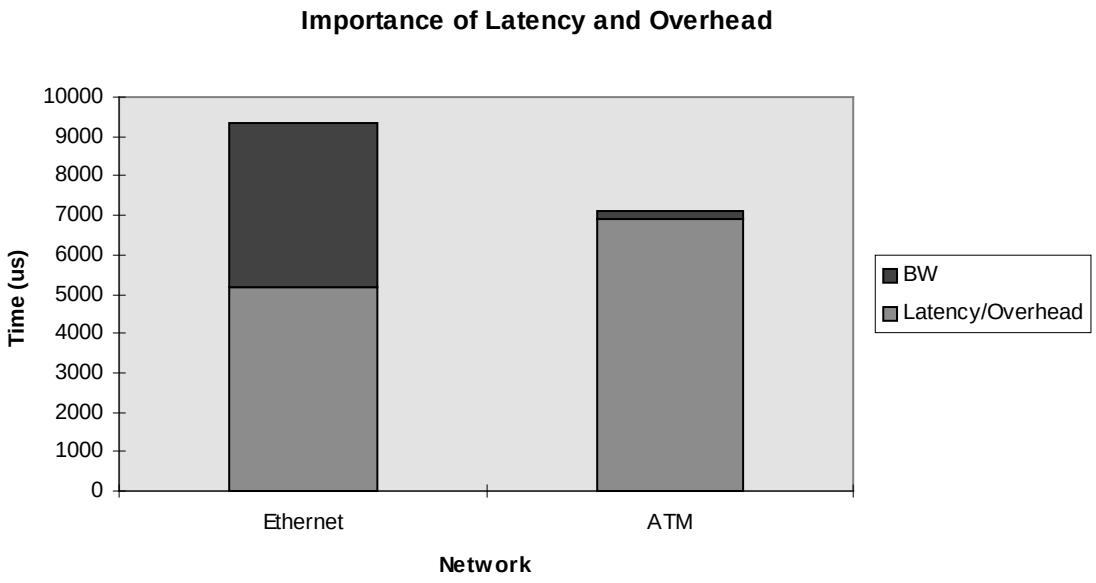

Study: NSF trace over 1 week: 95 msgs < 200 bytes
Ethernet: 9Mbit/s BW; 456us overhead
ATM Synoptics: 78Mbit/s BW; 626us overhead
→ ATM's 8x better bandwidth → 20% better performance
(latency predicts performance better than BW!)

Moral: bandwidth is not correct measure of network performance (like MIPS)

****
Summary - 1 min
****

Networks: huge impact on architecture

- standards, protocol -driven
- performance – not just bandwidth!!